Vehicle Tracking System with Alcohol & Accident Detector

Ramu S [1], Dinesh R [2], Sabarinathan U [3], Soundhar G [4], Shibumon R [5]
[1, 2] Assistant professors, PPG Institute of Technology, Coimbatore, Tamilnadu, India.
[3, 4, 5] Students, Department of Mechatronics Engineering, PPG Institute of Technology, Coimbatore, Tamilnadu,India.

ABSTRACT: Everyday people die in motor vehicle crashes that involve an alcohol-impaired driver getting behind the wheel of a vehicle – car, truck, motorcycle or any other motorized vehicle after consuming alcohol is a serious crime. Drinking and driving is referred to as driving under the influence (DUI) or driving while intoxicated (DWI), and involves operating a vehicle with blood alcohol content (BAC) level of at least 0.08 percent. However, even a small amount of alcohol can lead to harmful situations. Aim of the project is prevent accident due to alcohol consumption if vehicle met accident any other causes means track the vehicle by GPS system also implementation of GSM send the SMS to nearby police station and hospital. Using MQ3 sensor detects the alcohol level and its feedback forwarded to embedded micro controller then vehicle ignition turned off. Vibration sensor detects the vehicle shock based on this GSM and GPS activated.

KEYWORDS: Embedded microcontroller, alcohol detector, MQ3sensor, Vibration sensor, GPS, GSM, ADC, LCD and Buzzer.

1. INTRODUCTION

Here are several ways alcohol impairs driving skills so our project helps to prevent following risk factors, any amount of alcohol in your bloodstream can impact your driving ability. The abuse varies greatly, putting you at risk for causing an accident or highway injury. Safe driving requires the ability to concentrate, make good judgements and quickly react to situations. However, alcohol affects these skills, putting yourself and others in danger. When alcohol is in your system, it affects how quickly you're able to respond to different situations. Drinking slows your response time, which can increase the likelihood of an accident. Therefore, if the car in front of you brakes suddenly or a pedestrian crosses the street, it will take longer for your brain to process the situation and prevent an accident. Heavy drinking affects your motor skills such as eye, hand and foot coordination. Without crucial coordination skills, you may be unable to avoid an impending harmful situation. Some telltale signs of reduced coordination include trouble walking, swaying and inability to stand straight. Too much alcohol can even make it difficult to get in your car and find its ignition.

Alcohol, no matter how much or how little, can influence your concentration. With driving, there are many things that require your undivided concentration such as staying in your lane, your speed, other cars on the road and traffic signals. Your attention span is dramatically reduced with drinking, which significantly increases the chance of an accident. Excessive alcohol consumption can negatively impact your vision. After drinking, you may notice that your vision is blurred or that you're unable to control your eye movement. Impaired vision can affect how you judge the distance between your car and other vehicles on the road. Additionally, fewer objects may be visible within your peripheral vision, or what you can see to either side of you when looking straight ahead. Your brain controls how you judge certain circumstances. When operating a motorized vehicle, your judgement skills play an important role in how you make decisions. For instance, you need to be able to foresee potential problems and make clear decisions if another vehicle cuts you off. Your judgement helps you stay alert and aware of surrounding conditions while driving.

2. PURPOSE OF PROJECT

- Vehicle do not start if alcohol content detects
- Accident occurs by any other causes vibration sensor detects.
- GPS locate the accident spot.
- GSM sends the SMS to nearby hospital and police station

3. CIRCUIT DIAGRAM

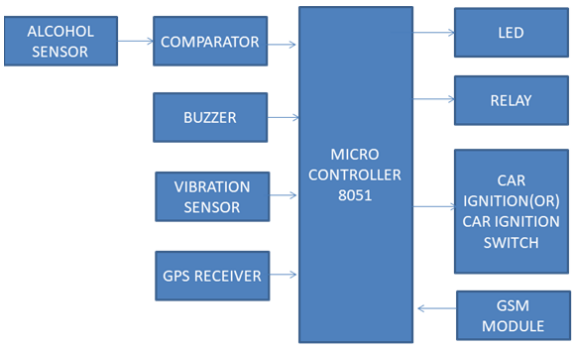

Fig.1 Circuit Diagram

4. COMPONENTS

a) Micro Controller-The Intel 8051 is an 8-bit microcontroller which means that most available operations are limited to 8 bits.

b) Alcohol Sensor-The analog gas sensor- MQ3 is suitable for alcohol detecting, this sensor can be used in a breath analyzer. It has a high sensitivity to alcohol and small sensitivity to benzene.

c) Vibration Sensor-That operate according to different mechanical or optical principles to detect vibrations of an observed system. This module when compared with normally open pneumatic shock sensor module, shock triggered much longer can drive relay module.

d) GPS Module- Location tracking device: For tracking the location of the drunk driver for remote communication, satellite based GPS (global positioning system) receiver module, with antenna is used.

e) GSM Module- It is an important component of the system that facilitates remote communication of 'SMS alerts' with location and vehicle number of drunk driver to the mobile phones of authorized persons (police station / family members).

5. PROJECT OVERVIEW

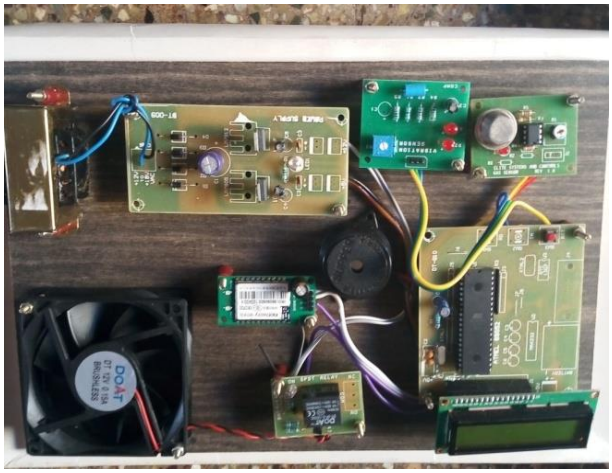

Fig.2 Project Overview

6. WORKING

Figure 1 shows the circuit connection of the system. Initially MQ3 sensor detects the alcohol level and it's feedback to the micro controller then turn off the ignition of vehicle. Vehicle met accident by any other causes vibration sensor detects condition and through micro controller signals passed to GSM & GPS. GSM used to locate the vehicle spot and GSM sends the SMS to hospitals and police station nearby.

7. APPLICATIONS

Alcohol detector system can be used in the various vehicles for detecting whether the driver as consumed alcohol or not.

Vibration detection system can be used in all vehicles for accident alert purpose. With help of GPS can locate the vehicle and GSM sends the emergency SMS.

8. FUTURE ENHANCEMENT

We can implement wireless sensor on this system.

9. CONCLUSION

This project helps to mostly avoid the drunken drive of any kind of vehicles. If unexpectedly an accident happen by some other reason we can track the vehicle immediately and medical aids provide quickly at exact place and time and save humans life.

REFERENCES

[1] PranjaliIngalepatil, Priyanka Barhate, BhagyashriNemade and Vijay D Chaudhari "Alcohol Detection System in Vehicle Using Arduino" International Research Journal of Engineering and Technology, Vol.4, Issue.06. ISSN: 2395-0072, e-ISSN: 2395 -0056, June2017.

[2] Abhishek Gupta, ShriramOjha , Vikash Kumar , Vikrant Singh , VipinMalav, "Alcohol Detection with Vehicle Controlling" International Journal of Engineering and Management Research, ISSN (ONLINE): 2250-0758, ISSN (PRINT): 2394-6962, Vol.-6, Issue-2, March-April 2016.

[3] Akshaykeshwatkar, Vishwa V, John Williams R,andSmitha PS "Sensor Based Automated Accident Tracking System" International Journal Advanced Research in Computer Science Engineering and Information Technology, Vol.2 Issue.1,ISSN_NO: 2321-3337,February 2014.

[4] PrabhaC, Sunitha R and Anitha R "Automatic Vehicle Accident Detection and Messaging System using GSM and GPS Modem " International Journal of Advanced Research in Electrical, Electronics and Instrumentation Engineering, Vol.3, Issue 7, ISSN: 2330-3765,July 2014.